GROVE	VARIANTEN VIDEOSYSTEME VARIANTS VIDEO SYSTEM	BILDTAFEL PICTORIAL DISPLAY			GMK 4100 BE 751 G 000
		05.13	3177207-ETL B	1/1	

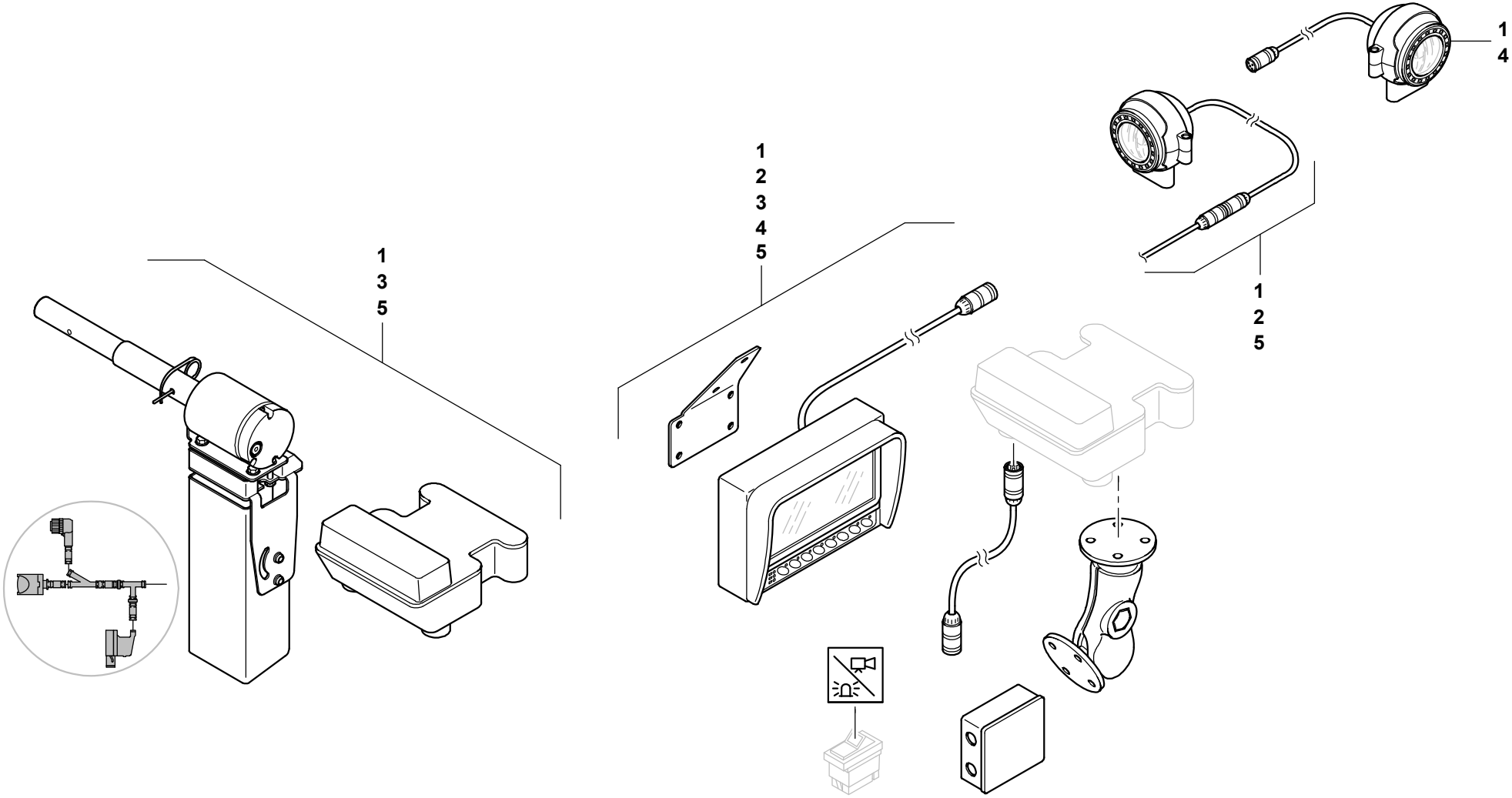

3177207-B-BL01-0513-0000